GBEM2240CR

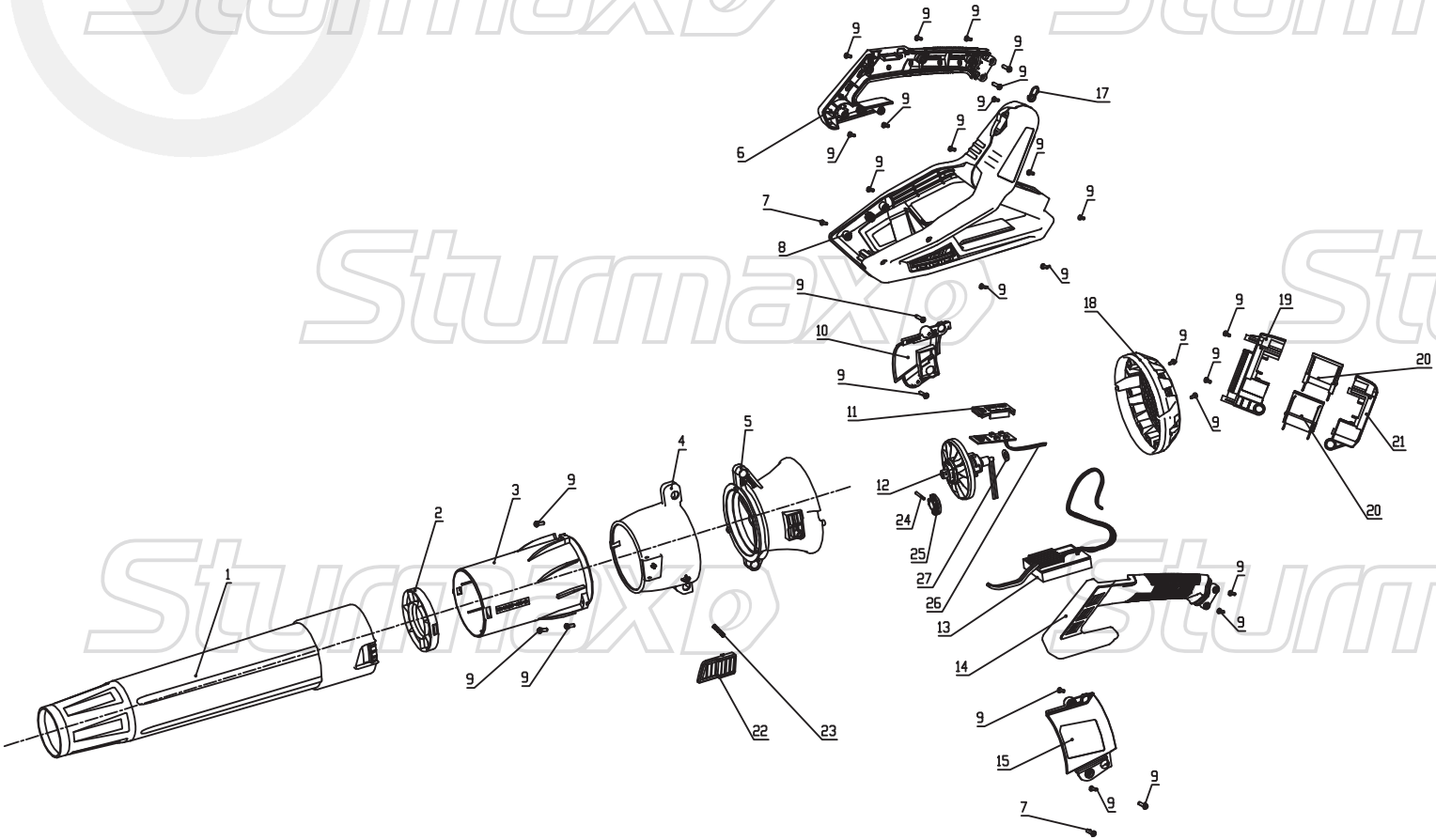

NO.	DESCRIPTION
1	PIPE
2	SAFETY FLAP
3	FLUIDIZER A
4	DIFFUSION DRUM
5	FAIRING A
6	RIGHT HANDLE
7	SCREW ST4*8
8	HOUSING
9	SCREW ST4*16
10	RIGHT CONNECTOR
11	PANNEL
12	MOTOR ASSY
13	PCB
14	LEFT HANDLE
15	LEFT CONNECTOR
17	STRAP HOOKS
18	AIR INTAKE COVER
19	UPPER BATTERY SEAT
20	PIN SEAT ASSY
21	LOWER BATTERY SEAT
22	PIPE BUTTON
23	SMALL SPRING
24	PIN Φ3X25
25	MOTOR REAR BRACKET
26	ELECTRICITY DISPLAY BOARD
27	DUSTPROOF WASHERS

GBEM2240CR-EX-UK250512-1

Sturmax